Blast Chillers

ITEM:	46671	46672	46673	46674
MODEL:	BC-IT-0103-T	BC-IT-0905-T	BC-IT-0906-T	BC-IT-0910-T

46671 -
24” wide (3 trays)

46672 -
32” wide (5 trays)

46673 -
32” wide by 44” tall (6 trays)

46674 -
32” wide by 66” tall (10 trays)

Rapid and efficient

These units are designed to quickly lower the temperature of foods to minimize bacterial growth ensuring food down through the danger zone within minutes. Blast chillers also offer an advantage by rapid freezing the food which produces fewer and smaller ice crystal resulting with minimal damage to the food. Perfect for hotels, restaurants, and food operation business.

FEATURES:

- External scotch-brite finish with internal glossy finish
- 60-mm high density polyurethane foam insulation
- CFC and HCFC free
- Designed with a digital control panel and core probe
- Core probe included
- Door switch for stopping the fan
- Removable grids-racks for easy cleaning
- Manual defrosting
- Automatic cold storage at the end of the cycle capacity ice cube tank

Technical Specification

Features	24” wide with 0.88hp (3 Trays)	32” wide and 36.6” tall with 1.1 hp (5 trays)	32” wide and 44” tall with 1.2 hp (6 trays)	32” wide and 66” tall with 1.8 hp (10 trays)
Item	46671	46672	46673	46674
Model	BC-IT-0103-T	BC-IT-0905-T	BC-IT-0906-T	BC-IT-0910-T
Number of Trays	3	5	6	10
Tray Dimensions	13” x 21” (330 x 533 mm)	18” x 26” (457 x 660 mm)	18” x 26” (457 x 660 mm)	18” x 26” (457 x 660mm)
Cooling Capacity (3°C / 37°F)	26.4 lb. (12 kg.)	40 lb. (18 kg.)	48 lb. (22 kg.)	70.5 lb. (32 kg.)
Cooling Capacity (-40°C / -40°F)	17.6 lb. (8 kg.)	26.5 lb. (12 kg.)	33 lb. (15 kg.)	55.1 lb. (25 kg.)
Cooling Loading	628 W / 0.84 hp	995 W / 1.3 hp	1194 W / 1.6 hp	1559 W / 2.1 hp
Power	648 W / 0.88 hp	828 W / 1.1 hp	922 W / 1.2 hp	1355 W / 1.8 HP
Amps	4.2 A	4.8 A	5.5 A	6.5 A
Electrical	220V / 60Hz / 1Ph			
Refrigerant	R404A			
Interior Dimensions (WDH)	21.7” x 13.9” x 11” (551 x 353 x 280 mm)	18.5” x 27.6” x 15” (470 x 701 x 381 mm)	18.5” x 27.6” x 19” (470 x 701 x 483 mm)	27.6” x 18.5” x 30” (701 x 470 x 762mm)
Net Weight	150 lb. (68 kg.)	236 lb. (107 kg.)	303 lb. (137 kg.)	312 lb. (142 kg.)
Net Dimensions (WDH)	24” x 25.6” x 26” (620 x 650 x 670 mm)	32.2” x 32.5” x 36.6” (820 x 825 x 930 mm)	31.1” x 32.2” x 57.5” (790 x 820 x 1460 mm)	32” x 32” x 66” (813 x 813 x 1676 mm)
Gross Weight	165 lb. (75 kg.)	256 lb. (116 kg.)	375 lb. (170 kg.)	386 lb. (175.1 kg.)
Gross Dimensions (WDH)	25" x 27" x 32" (640 x 690 x 810 mm)	33" x 33" x 44" (850 x 850 x 1110 mm)	47” x 36” x 66” (1194 x 914 x 1676 mm)	33.5" x 33.5" x 73" (850 x 850 x 1860 mm)
Plug Type	NEMA 6 - 15P			

Technical Drawing

*measurements in diagrams are in mm

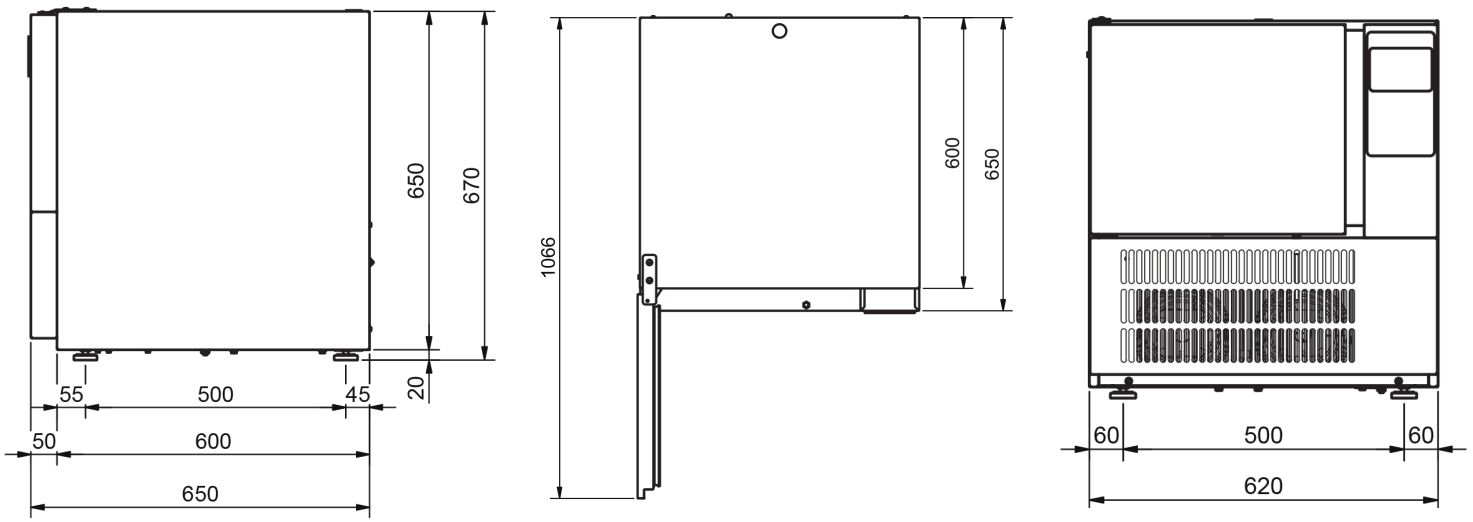

46671

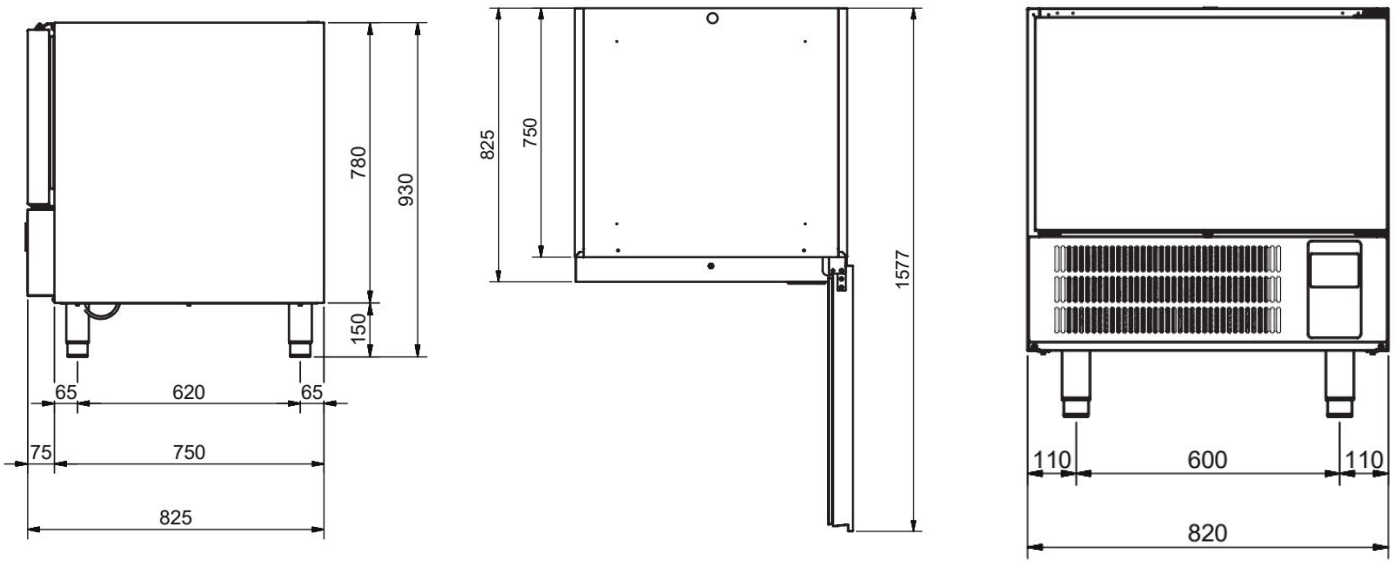

46672

Technical Drawing

*measurements in diagrams are in mm

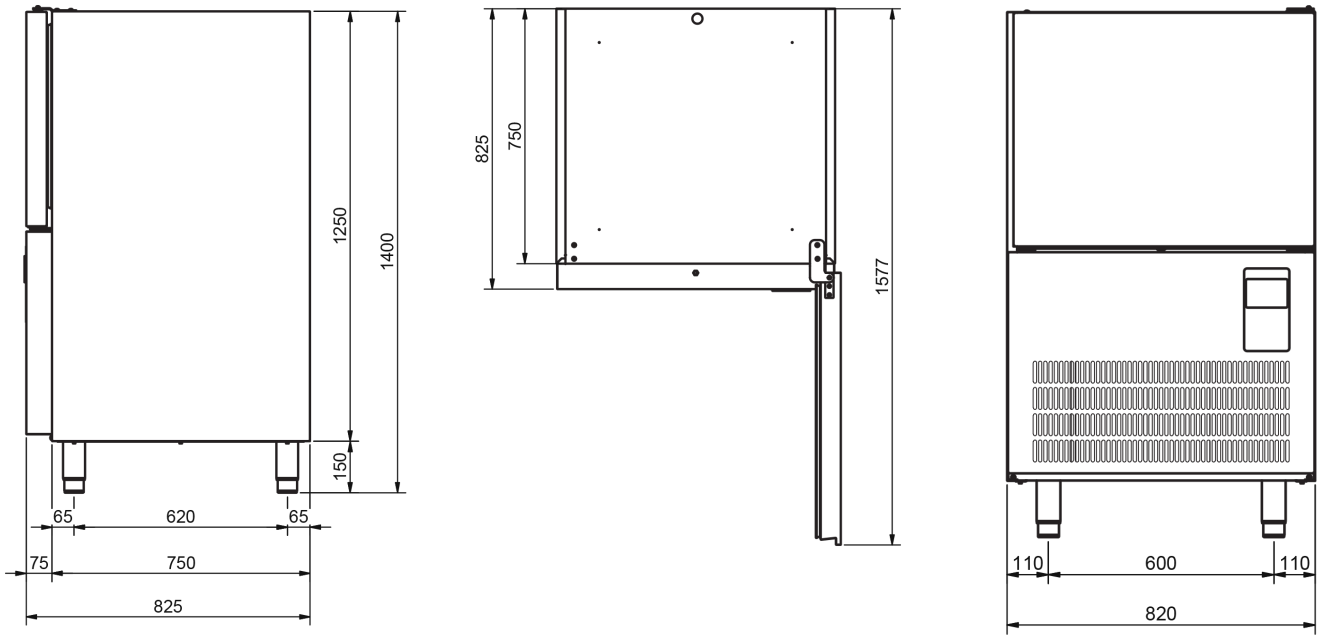

46673

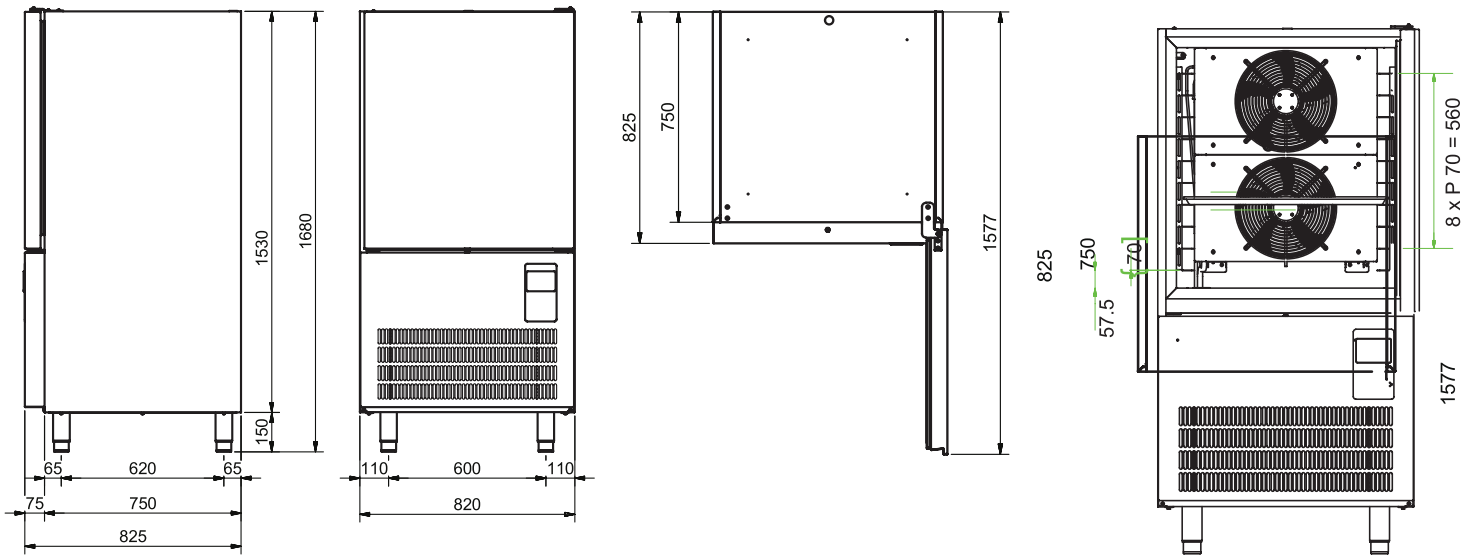

46674